Surveillance Robot for Defence Environment

[1]Aniket.A.More & [2]Akshay.V.Jadhav & [3]Sweta Patil
[1,2]Department of Electronic Engineering, A.I.S.S.M.S Institute of Information Technology Pune, Maharashtra, India.
[3] Assistant Professor, Department of Electronic Engineering, A.I.S.S.M.S Institute of Information TechnologyPune, Maharashtra, India.

Received: February 04, 2019 Accepted: March 26, 2019

ABSTRACT: *This paper presents gives a practical present-time approach for surveillance robots at remote locations and enemy territories using a remote controller based robotic vehicle on wireless technology that can be used for defence and military applications. The sensors and camera are used to detect and identify human, objects etc. This vehicle is designed to work in limited area with better efficiency for example In Armed forces. They can use these types of robot vehicles in hostage situations to determine the number of terrorists in the building, types of weapons used, bombs etc. The processing unit used in proposed system is Raspberry pi working on raspbian operating system. The Pi board controls the movement, gather information using sensors and camera that is used to stream the real time video of surrounding to the operator.*

Key Words: *Surveillance, Robot, Raspberry Pi, PIR, Pi Camera, GPS.*

Introduction

Surveillance is a real time collection and analysis of data that is timely distributes the information to the operator. Surveillance in Defense Applications plays an important role for keeping an eye out in order to protect its citizens and take necessary action as needed.Surveillance is the task of monitoring the set of conditions, of an area or a person. This generally occurs in a military scenario where surveillance war areas, adversary territory or hostage situation is crucial to a nation's security. Human surveillance is carried by experienced work forces in close sensitive areas so as to continually monitor for changes. Whereas there is always added risks of losing work force in the time of getting caught by the adversary. With advanced technology in pasted years, there it is possibility to monitor areas of importance remotely by the use of robots instead of human. Apart from the given advantages of not losing any work forces, physical and elegant robots can be used detect subtle elements that are not conspicuous to people. By embedding the robots with high resolution cameras and different types of sensors, it is manageable to gather information about the designated location remotely.

A surveillance robot is a partially automated machine that works as per instructed by operator and which gather required data , work and move to destination by detecting the obstacles in the way using the sensors , Streaming or capture images which can then analyzed by the operator. Our aim in this paper is to provide a solution/example for the wireless controlled robot vehicle that can sense the object, measure the distance between the vehicle and person, and stream video of the surrounding to the operator through wireless medium.

Literature Survey

In paper [3], the author has proposed the defense environment types of military robots for attack operations and surveillance, the robots are been controlled by using standard short distance RF waves which limits the capability, reduce the reliability and operation functionalities of the robots in terms of long distance remote controlling. To overcome this problem, the author proposed a self-neural schema based framework used for autonomous control and decision making and a reporting system, embbebed in the robot vehicle. There project consist of a Multi–angled rotatable Camera for increased view of military base or other places. Ultrasonic sensor is used for direction control and object detection for motor control.

In paper [2], the author has proposed surveillance robot system used for the real time surveillance in intrude area. This system was designed for video monitoring, capturing the images and storing video frames in memory cards for further verification. This system is controlled by a mobile GUI based application connected over Wi-Fi wireless medium to the surveillance robot.

In paper [8], the author has proposed a robot unit using Zigbee technology to control that unit. The camera unit is used for surveillance in an area which transmits live feed to portable television. With the help

of technology like Zigbee it is possible to controlled long range based robots within 100m from remote locations.

Proposed System

In our proposed system a robotic vehicle used to analyze the areain hostage situation and provide accurate data to the operator totake preventive actions to avoid loss of life or object. The vehiclehas two different sensors : PIR sensor and Ultrasonic sensor. The PIRsensor senses the motion in the area as the ultrasonic sensor determineshow far the person is for the vehicle.

The Robotic vehicle is controlled by a RF remote-control that gives theprocessor instruction in which direction to move the vehicle like FORWARDdirection, BACKWARD direction, LEFT direction and RIGHT direction. The remote consist of decoding integrated circuit which decodes the information 3 times to check if it matches the content of addresses send form the transmitter integrated circuit this enhances the application flexibility in the system.

Features :

- Implementing of IEEE 802.11 Wireless LAN.
- Low power high performance System on Chip(SOC).
- Ultrasonic sensor sensing object distance while detecting motion on PIR sensor.
- Active Display of camera feed to the operator.
- Standby mode to conserve battery life.

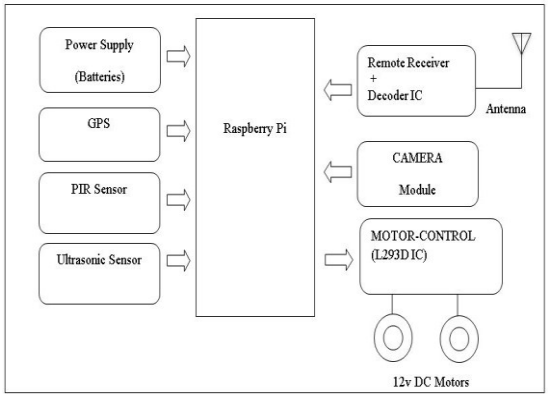

Fig.1 Block Diagram

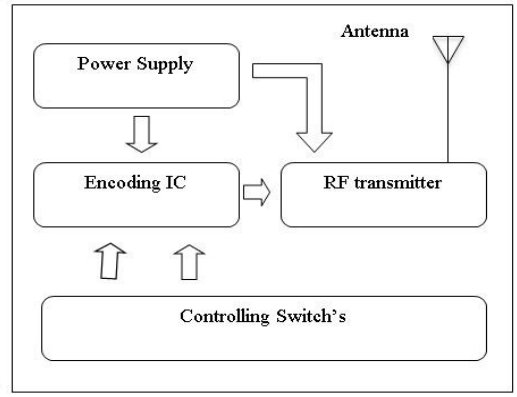

Fig.2 Block Diagram of Remote-control

System Description

The fig.1 gives the conceptual description of the proposed system.

A. Motion Control

The robotic vehicle consist of the remote control operated DC motors for the movement of the vehicle. The movement is control through different instruction given by transmitting remote which encodes the information which consist of N address bits and 12-N data bits. These address and data bits are transmitted through RF transmission media upon the reception of the trigger signal.

The decoder section is capable of decoding N-bits of address bits and 12-N bits of data. The decode compares the serial input data three times continuously with there local addresses. If no error are found, the input data is decoded and transferred to output pins . The VT (valid transmission) signal goes HIGH whenever there is an valid transmission. Each of the output pins are assigned there operations at software level when an output pins goes LOW the software determines the pin number an operates the vehicle as per the given instructions.

B. Video streaming

Camera module connects to the Raspberry Pi board via the CSI connector designed specifically for interfacing to cameras. The CSI bus is capable of extremely high data rates, and it exclusively carries pixel data to the processor.

The camera module used to capture the video in "MJPEG" format that is used to stream the surrounding of the area.

C. Sensors

There are two sensors used in the proposed system. Sensors are used to gather information about the

environment we use our vehicle.

Ultrasonic Sensor: It is a module used for non-contact measurement upto 500cm. It has accuracy of 3mm. The ultrasonic sensor uses waves to measure a object distance where the waves travel distance and refect distance is calculated by subtracting one form other. The obtained result is multipled with Speed of sound i.e 34300 cm/sec . Ultrasonic sensor has the same working principle as rader but lacks range capability.

PIR sensor: The PIR sensor is used to detect motion. The module consist of onboard Pyro-electric sensor, a dome shaped len, conditioning circuitry. It is used to sense heat of people, animal, or an object. The pyro-electric sensor generates heat obtained form Human or animals body that comes in contact by sensor.

D. Raspberry Pi

The Raspberry Pi has a Broadcom BCM2835 system on a chip which includes an ARM cortex 1 GHz processor Video CoreIV GPU and was originally shipped with 512 MB of RAM, later Upgraded to 1 GB. It does not include a built-in hard disk or solid-state drive, but Uses an SD card for booting and long-term storage.Raspberry Pi uses raspbian Linux based operating system and consists of GPIO used for connecting external devices like sensors, LCD Display etc.

Pi handles and operates the sensors, GPS and camera modules and provides the instructions to control the movement of the vehicle. Pi keeps the logs of all the sensor data and GPS data in Text format where the operate can use for later analysis. Pi has the power to control all the operations of the robot without using any other external processing unit.

E. GPS

The GPS (Global Positing system) is used to gain location of the vehicle. The GPS provides the longitude, latitude, date and time which gives the location of the robotic vehicle [3].

Results

The results obtained at the demonstration of the system are mentioned below:

In the fig.3 the protype of survelliance robot is displayed. The system consist of sensor, processing unit, RF remote recevier, DC motors and the Pi camera module.

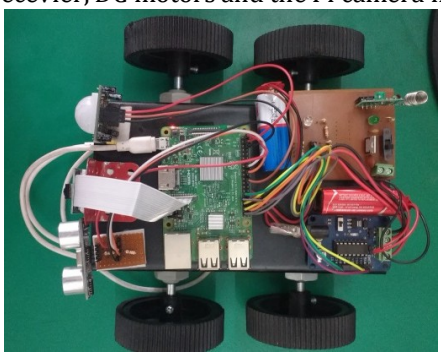

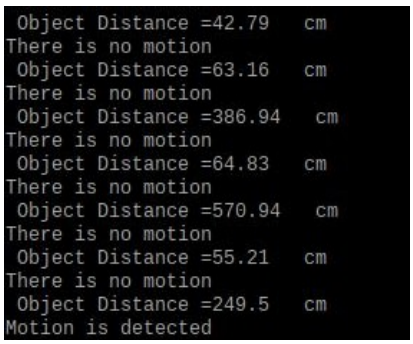

Fig.3 Working Model of the system Fig.4 Sensor output data

In the above fig.4 the data of the sensors is obtained where both the sensors senses the surrounding until the system is put into standby mode. The data obtained is stored in log files which is aysnc to operator and can also be used for later analysis. In Ultrasonic sensor works as radar which sends a trigger wave and receives an echo of the wave the total distance travelled by the wave is calculated and displayed in cm. PIR sensor senses the heat generated by human, animals etc. that determines the motion in effect in front.

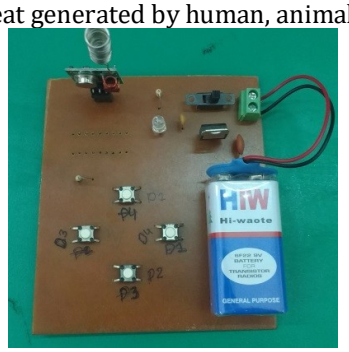

Fig.5 RF remote control Fig.6 Video camera Live feed on software

Fig.5 is of RF remote control which is used to send instructions to the robot to control the movement and guide it to the designated path.

In the above Fig.6 the live feed of the camera module is viewed on the software by the operator through wireless medium. The camera streams the feed in "MJPG" format where the operator has less frame drops that give advantage to operator to determine the situation in the surroundings.

Conclusion

In the proposed system the interfacing of sensors, camera module, Motor control and GPS is done with Raspberry pi for better processing control which provides better surveillance implementation. In this system we obtain information about the area within 5m-10m by use of remote control, sensors and camera feed through wireless medium. In future we can implement fully automated and computer vision based surveillance system to obtain more accurate results.

References

1. Balaji.M, Karthick.S, Manikandan.V, Benedict Ebinesar.J, Vijay Nagaraj "Survillance and Target Engagement using Robots" IOSR Journal of Electronics and Communication Engineering 2017, pp.01-06.
2. K. Damodhar, B. Vanathi and K. Shanmugam "A Surveillance Robot For Real Time Monitoring And Capturing Controlled Using Android Mobile" Middle-East Journal of Scientific Research 24, pp 155-166
3. M.Karthikeya and Mr. G. Sreeram "Intelligent Exploration and Surveillance Robot In Defense Environment" International Journal of Advanced Research in Electrical, Electronics and Instrumentation Engineering. Vol. 3 pp120-123
4. M.Brem Kumar, D.Manikandan, M.Gowdem and D.Balasubramanian "Mobile Phone Controlled Alive Human Detector Using Robotics" International Journal of Advanced Research in Computer Engineering & Technology Vol.4 Issue.3, pp 981-984
5. Raspberry Pi Foundation, http://www.raspberry.org
6. Python, http://www.python.org
7. Pi Camera, http://picamera.readthedocs.io
8. SaurabhNalawade "Robots For Surveillance In Military Applications" International Journal Of Electronics And Communication Engineering And Technology. Vol.7 Issue 5, Pp.23939-23944
9. SimpleCV, http://www.simplecv.org
10. TarunpreetKaur, Dilip Kumar "Wireless Multifunctional Robot for Military Applications" 2015 IEEE 2nd international conference on recent advances in engineering and computational sciences April 2017.